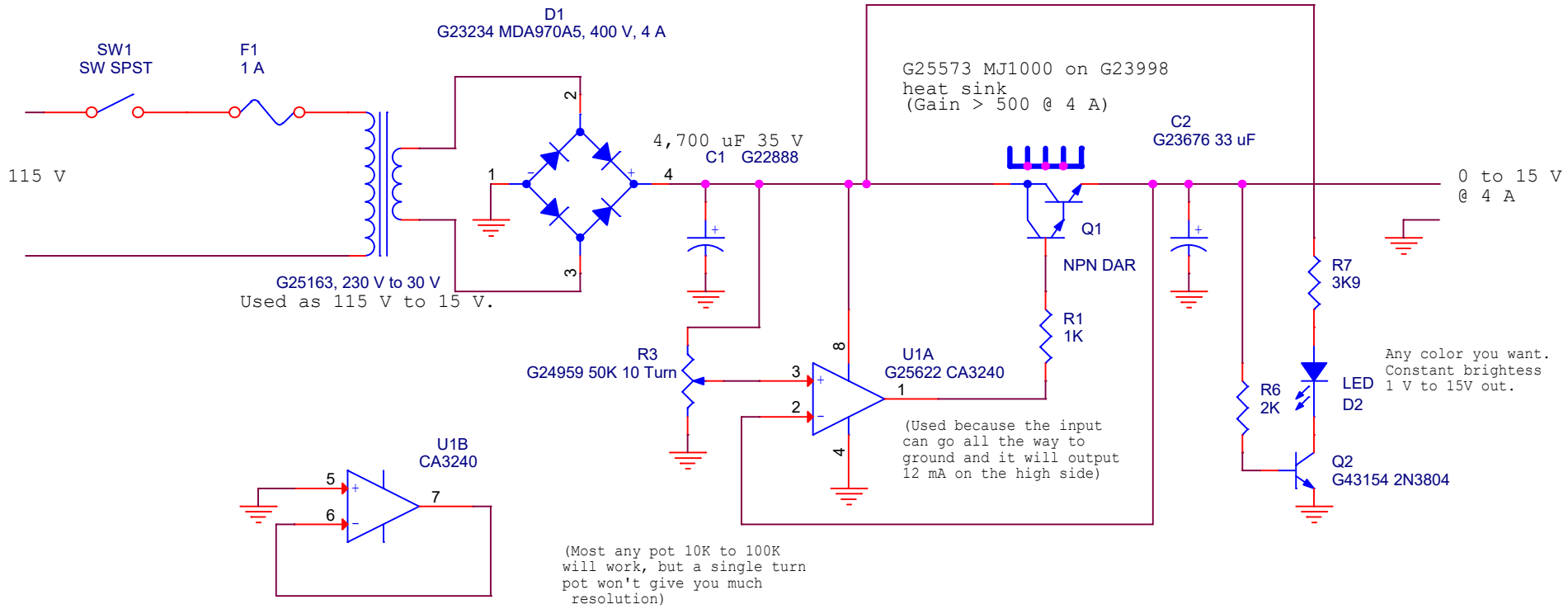

Title	G25163 transformer used at 115 V AC	
Size A	Document Number Design 1834	Rev 1
Date: Friday, April 23, 2021	Sheet 1 of 1	